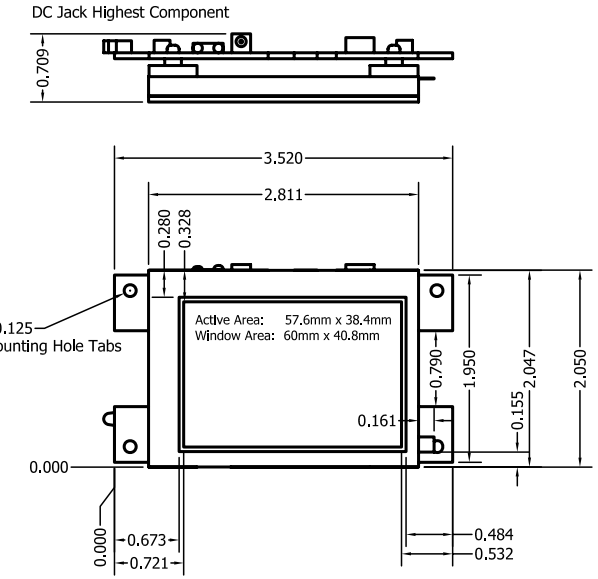

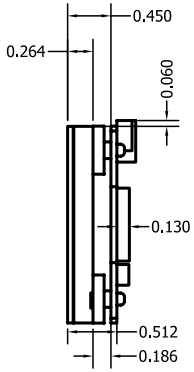

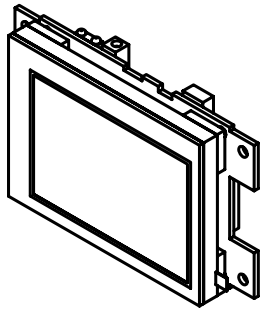

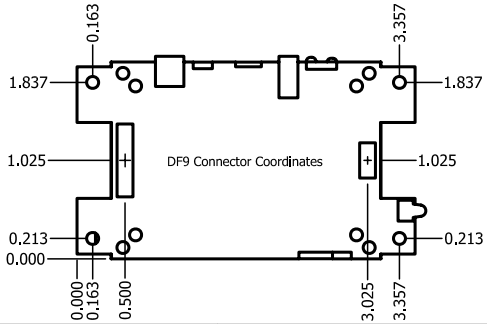

Dimensions are in Inches

LCD Module Dimensions:
71.4mm x 52.0mm x 4.8mm (t) (parts area 6.5mm (t) max.)

Effective display dimensions:
57.6mm (H) x 38.4mm (V)

DRAWN Luis Escalante	11/30/2005	ezLCD.com (Earth Computer Technologies, Inc)
CHECKED		TITLE
QA		ezLCD-002 Dimensions W/O Touch Foam Tape
MFG		
APPROVED		SIZE B / DWG NO ezLCD-002 / REV B
		SCALE / SHEET 1 OF 1